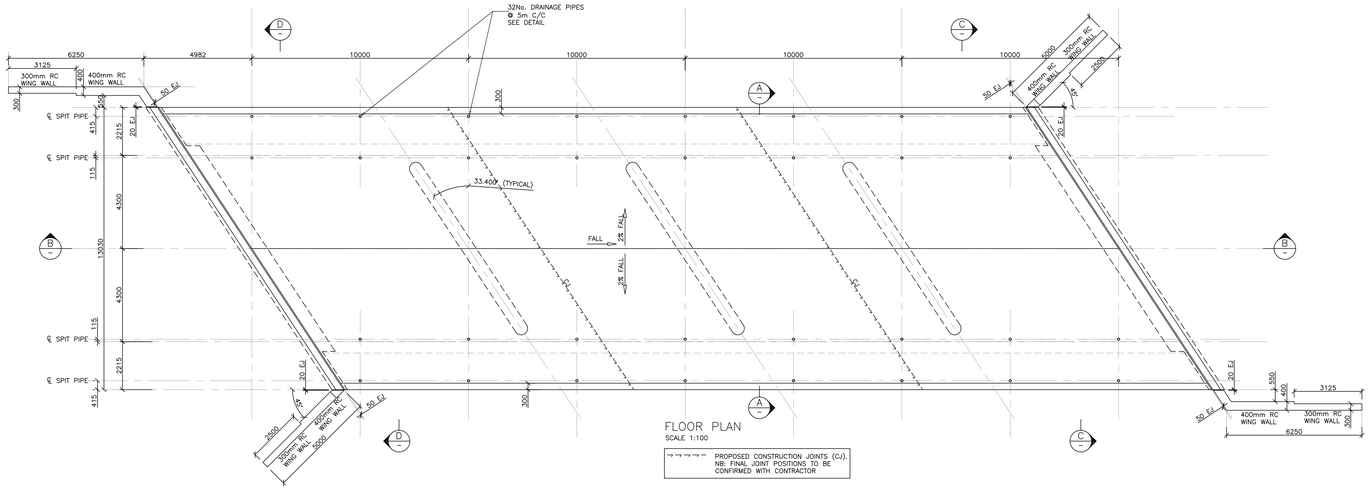

FLOOR PLAN
SCALE 1:100

PROPOSED CONSTRUCTION JOINTS (CJ).
NB: FINAL JOINT POSITIONS TO BE CONFIRMED WITH CONTRACTOR

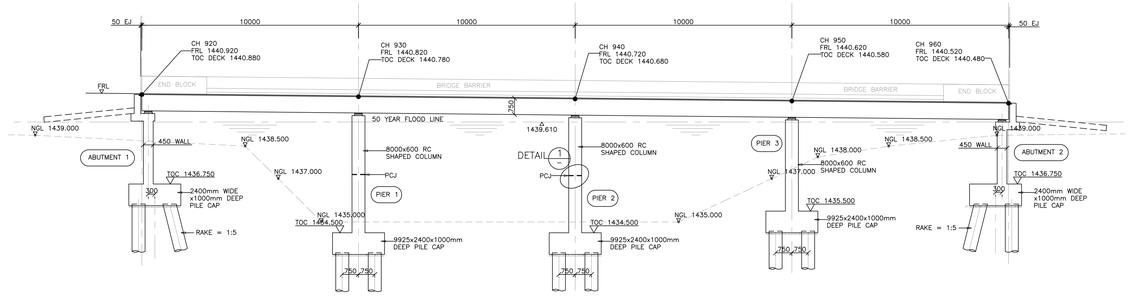

LONG SECTION (AT CENTRELINE) B
SCALE 1:100

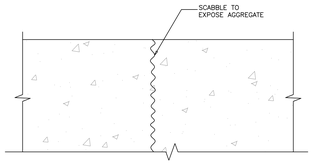

SLAB CONSTRUCTION JOINT (CJ)
SCALE 1:2

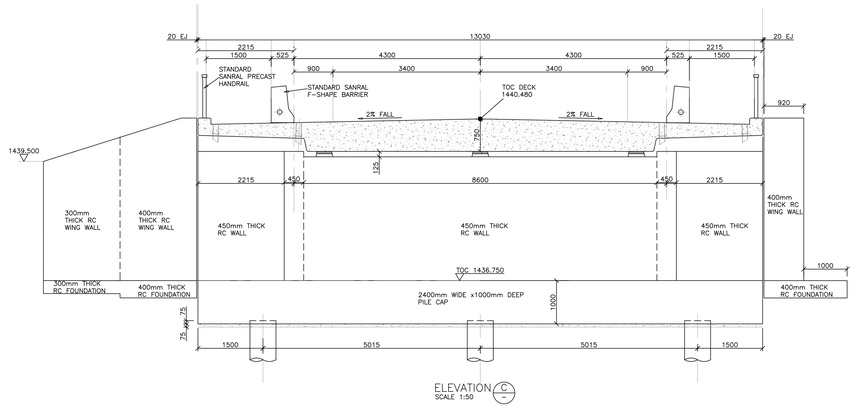

ELEVATION C
SCALE 1:50

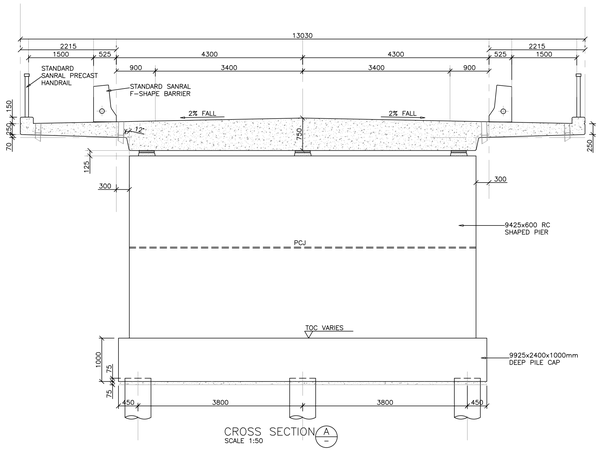

CROSS SECTION A
SCALE 1:50

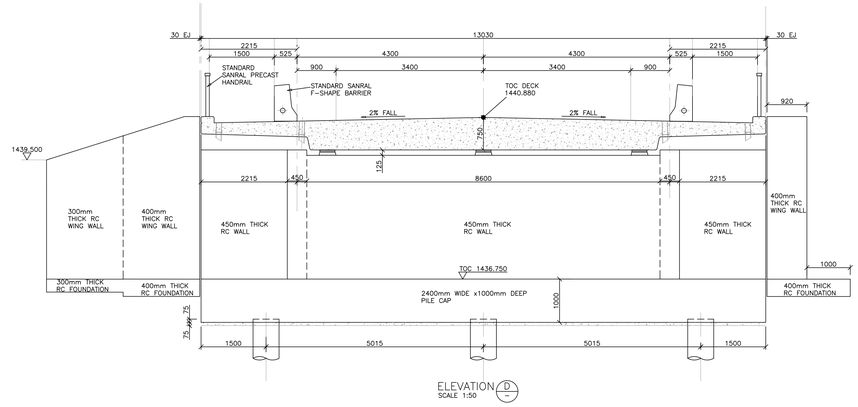

ELEVATION D
SCALE 1:50

GENERAL NOTES:

1. DO NOT SCALE THIS DRAWING
2. WORK IN FIGURED DIMENSIONS ONLY. ANY DISCREPANCIES ON THIS DRAWING TO BE BROUGHT TO THE ATTENTION OF THE ENGINEER PRIOR TO THE IMPLEMENTATION OF ANY WORK.
3. THIS DRAWING IS TO BE READ IN CONJUNCTION WITH THE RELEVANT ENGINEERS DRAWINGS.
4. ALL CONSTRUCTION TO CONFORM TO THE FOLLOWING CODES SANS 1200, SANS 2001

CONCRETE NOTES:

1. ALL CONCRETE WORK IS TO BE IN ACCORDANCE WITH SANS 1200G AND THE PROJECT SPECIFICATION.
2. CONCRETE STRENGTHS:

ELEMENT	CONCRETE STRENGTH AT 28 DAYS (MPa)/ AGGREGATE SIZE (mm)	COVER (mm)	MAX. WATER/CEMENT RATIO
BLINDING	10/19		0.53
MASS CONCRETE	30/19		0.53
FOUNDATIONS	30/19	75	0.53
PIERS	30/19	50	0.53
WALLS	30/19	45	0.53
SLABS	40/19	45	0.53
ALL OTHER CONCRETE	30/19	45	0.53
PRECAST PORTAL CULVERTS	30/19		

3. CONCRETE FINISH TO:

ITEM	FORMWORK TYPE	DEGREE OF ACCURACY
FOUNDATIONS	SMOOTH	II
PIERS	SPECIAL SMOOTH OFF SHUTTER	II
ABUTMENT WALLS	SPECIAL SMOOTH OFF SHUTTER	II
ABUTMENT WALLS (EARTH FACE)	SMOOTH	II
SLABS	SPECIAL SMOOTH OFF SHUTTER	II
BARRIERS & HANDRAILS	SPECIAL SMOOTH OFF SHUTTER	I

PERMISSIBLE DEVIATION, DEGREE OF ACCURACY IN ACCORDANCE WITH SANS 1200G

4. ALL CONCRETE EDGES TO CHAMFERED 25x25mm
5. LEGEND

U/S BEAM – UPSTAND BEAM
D/S BEAM – DOWNSTAND BEAM
U.N.O – UNLESS NOTED OTHERWISE
BEAM SIZES SHOWN AS WIDTH x DEPTH
00.000
▽ TOP OF CONCRETE (TOC)

COLUMNS AND WALLS SHOWN THUS:

OVER AND UNDER
UNDER ONLY

6. TESTING OF CONCRETE
TEST CUBES SHOULD BE TAKEN VERY 50m³ OR FOR EACH POUR (WHICHEVER IS THE LEAST) OR AS REQUIRED BY THE ENGINEER
7. REINFORCEMENT
   a. ALL HIGH TENSILE STEEL (Y BARS) TO BE TYPE C CLASS 2 GRADE 1 WITH A MINIMUM GUARANTEED YIELD STRESS OF 450MPa as per SANS 920–2011
   b. ALL MILD STEEL (R BARS) TO HAVE A MINIMUM YIELD STRESS OF 250MPa IN ACCORDANCE WITH SANS 920–2011

BRIDGE/CULVERT NOTES

1. DESCRIPTION OF STRUCTURE
1.1. ~~THE CULVERT CONSISTS OF 5 BARRELS OF 2100x2100 CLASS 75D PRECAST RECTANGULAR PORTAL CULVERTS IN ACCORDANCE WITH SANS 986. THE BASE SLABS, WING WALLS AND HEAD WALLS ARE CAST IN-SITU CONCRETE.~~
1.2. ALL EXISTING CULVERT OR BRIDGE STRUCTURES TO BE DEMOLISHED
2. DESIGN CRITERIA
   a. DESIGN CODES USED:
      TMH7 PARTS 1&2
      TMH7 PART 3
      SANS 0100
      CODE OF PROCEDURE FOR THE PLANNING AND DESIGN OF HIGHWAY AND ROAD STRUCTURES IN SOUTH AFRICA
3. LOADINGS USED IN ACCORDANCE WITH TMH7 PART 2
   a. NA LOADING
   b. NB LOADING – TYPE NB36
   c. NC LOADING – TYPE NC–30X5X40
   d. REINFORCED CONCRETE UNIT WEIGHT – 25.5kN/m³
   e. PREMIX UNIT WEIGHT – 21kN/m³
   f. EARTH FILL BEHIND ABUTMENTS – 20kN/m³
4. HYDRAULIC INFORMATION
   a. CATCHMENT AREA =322.84km²
   b. 20 YEAR FLOOD =391.93m³/s
   c. DESIGN FLOOD RECURRENCE =50 Years
   d. DESIGN FLOOD =581.30m³/s
   e. REGIONAL MAX FLOOD =.m³/s
   f. AVE. SLOPE OF STREAM AT BRIDGE =.%
   g. NATURAL DESIGN FLOOD LEVEL =1439.61m
   h. HIGHEST KNOWN FLOOD LEVEL =.m
   i. NATURAL FLOOD DEPTH WITHOUT BRIDGE =.m
   j. NATURAL FLOW VELOCITY WITHOUT BRIDGE =5.54m/s
   k. REQUIRED MINIMUM FREEBOARD =.m
   l. FREEBOARD TO SBP (QT2) =.m

FOR TENDER PURPOSES ONLY

Drawing Nr	Reference Drawing	Date	Chkd	Apprv

Rev	Description	Date	Chkd	Apprv

Client: Province of the EASTERN CAPE TRANSPORT

Project: THE COMPLETION OF UPGRADING TO A SURFACE STANDARD DR08606(+/- 12Km) STERKSPRUIT TO MLAMLI

Consultant: MASILAKHE CONSULTING DEVELOPMENT MANAGERS

Approved: _____
Name S.K.Anthony Date: XX-XX-XXXX

Drawing Title: BRIDGE 1 GENERAL ARRANGEMENT DRAWING

Proj. Engineer	S.K.Anthony
Designed	A.Scott
Drawn	C.Ntung
Checked	A.Scott
Proj. Manager	V.S.Rune

Scale: AS SHOWN
Sheet No. 1 OF 2
Project No.
Drawing No. B1-S02.1
Revision T